FLEXFIRE

RGB + Dynamic Tunable White

DMX Lite™ Controller

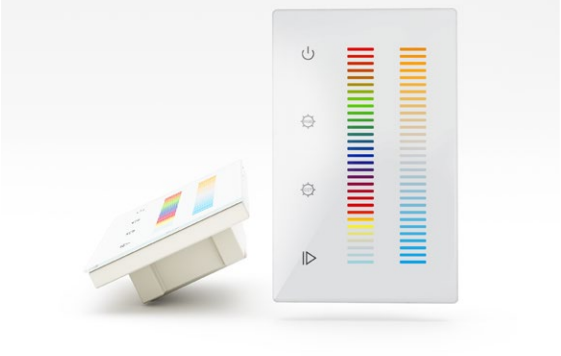

Product Specifications

Input Voltage	12-24V DC Constant Voltage
Output	DMX512
Zones	1
Dynamic Modes	10
Power Save Memory	Yes
Power Consumption	< 20 mA
Ambient Temperature	-32°F - 104°F (0°C-40°C)
IP Rating	IP20 (Indoor/Dry Location Only)
Size	4.72" x 2.95" x 1.15" (12 cm x 7.5 cm x 3 cm)
SKU	DMX-RGBDYN-CTRL

Tools Needed

Flat-head screwdriver

Small-flat head screwdriver

Wire strippers

Phillips-head screwdriver

Product Features

- DMX512 Controller
- Stylish glass interface
- DC input and DMX output screw terminals
- Fits in a standard US single gang box
- Mounting plate and screws included
- Short circuit protection
- Single zone control
- Works with five-channel RGB+Dynamic Tunable White lighting

Controller Mounting

To mount the controller into a single gang box, simply pop the faceplate of the controller off with a flathead screwdriver to expose the screw holes, screw it into a standard switch box with the screws provided, and replace the faceplate when done.

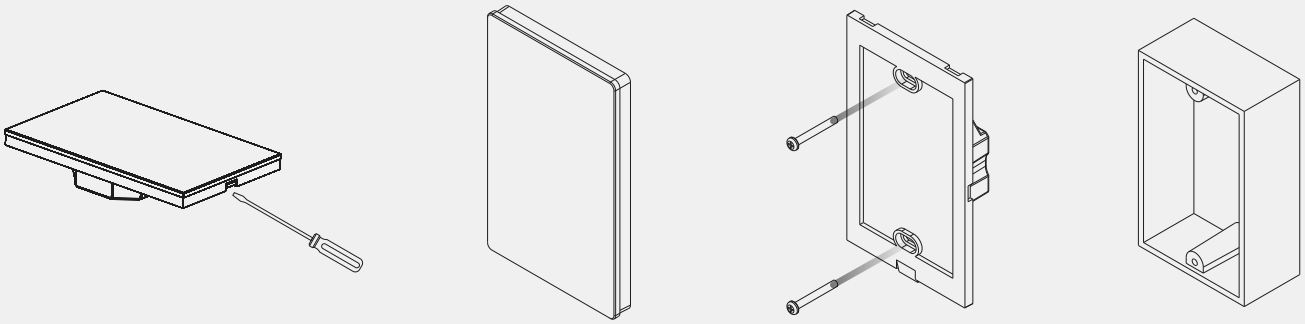

Controller Wiring

1. Ensure that you have a dedicated 12V or 24V DC constant voltage power supply to power the controller that is separate from the power supply you will be using for your light fixtures.

2. Connect the power supply using the screw terminals. The power supply's positive and negative wires should be connected to "V+" and "-" terminals under DC Input, respectively.

3. Connect the DMX data cable to the DMX output screw terminals.

- Data Negative will be the terminal marked "D-"
- Data Positive will be the terminal marked "D+"
- Ground will be the terminal marked "GND."

If you are using CAT5 cable for data wiring, the standard pinout scheme would have Solid Orange as "D-", Striped Orange as "D+", and Solid Brown as "GRD." Please see the diagram below.

4. Power up the power supply once your installation connections are all completed.

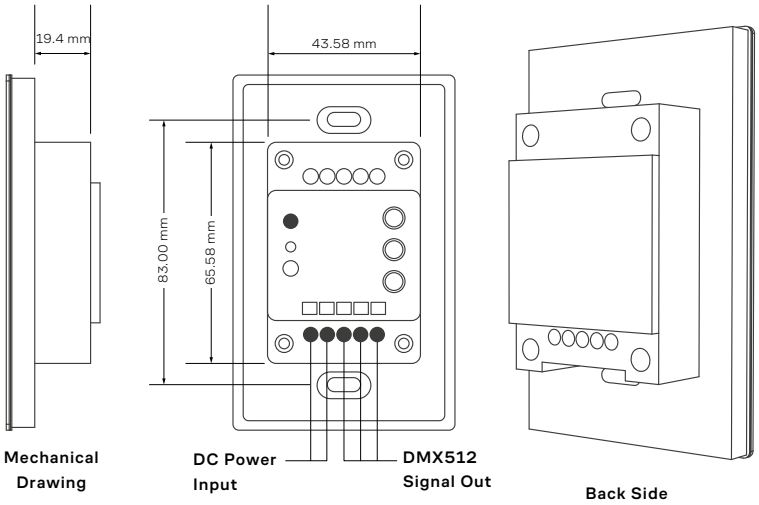

System Wiring

Below is an example of a DMX system. Every system is configured differently, but this is a basic system layout. Do not link more than ten DMX decoders together in series. If using more than ten DMX decoders in series, you will need to utilize a DMX splitter.

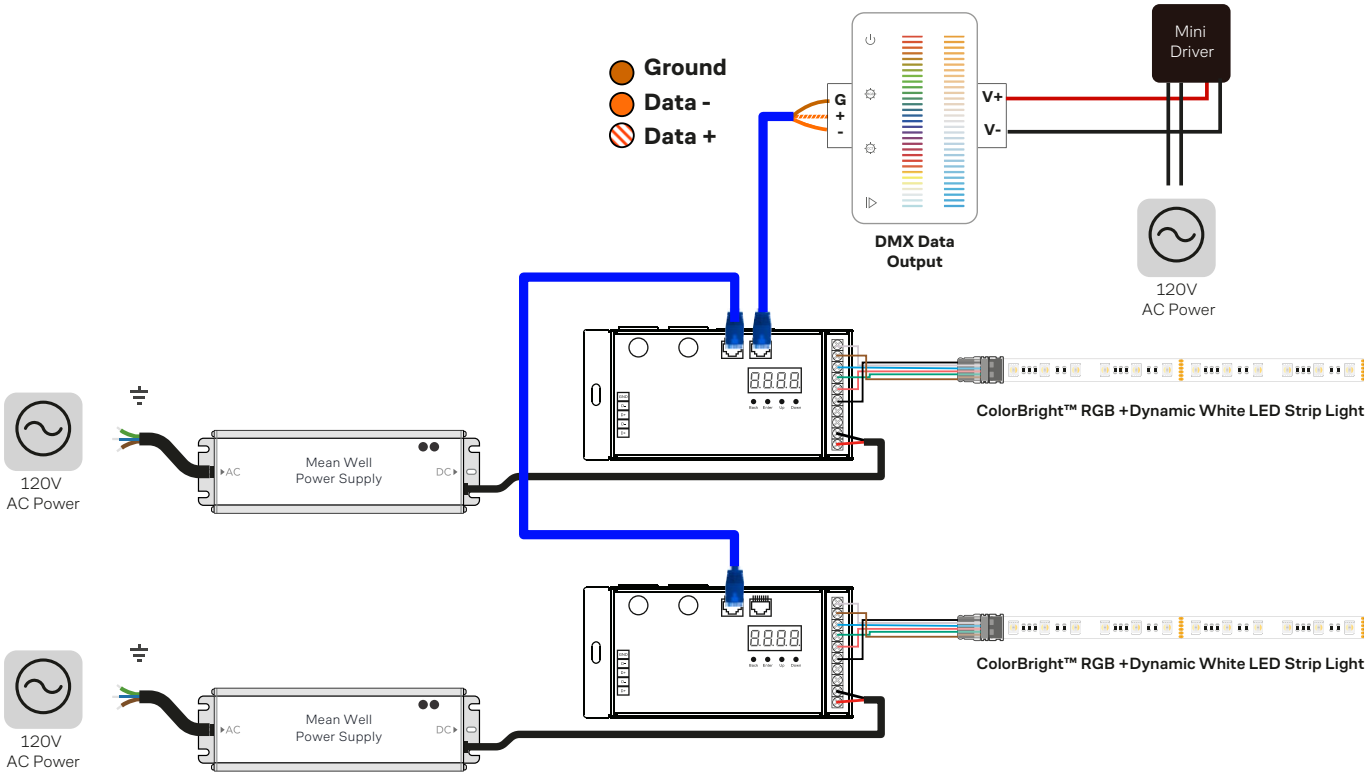

Controller Functions

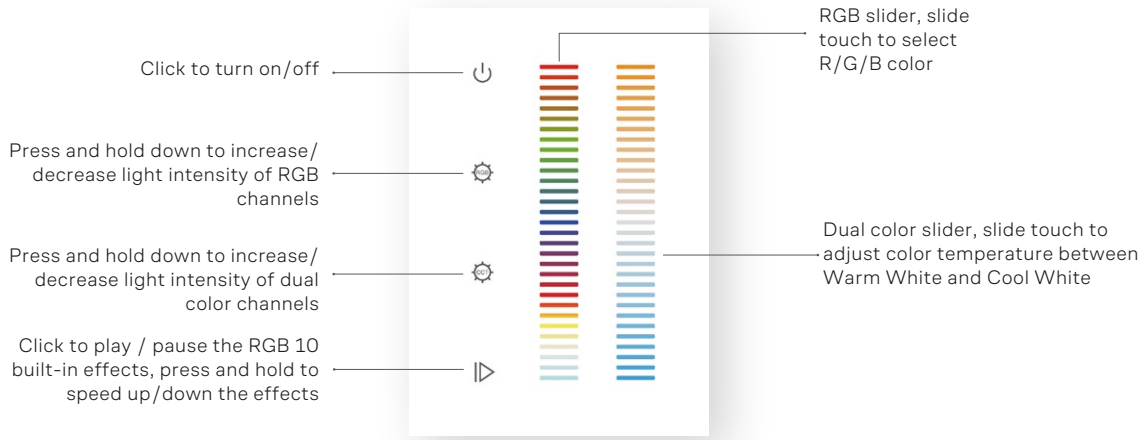

Dynamic Mode Guide

By pressing the button that looks like the Play symbol on the controller, you are able to access Dynamic Mode which consists of ten basic preset scenes loaded onto the controller. Short pressing the button switches/pauses the mode, while long pressing the button adjusts the speed of the current mode. Below is a chart of the scenes available.

Mode	Description
1	Full Color Fade #1
2	Reverse Rainbow Fade
3	Random Full Color Fade
4	7 Color Jump
5	RGB Fade in/Fade Out
6	RGB Fade in to Off
7	RGB On to Fade Out
8	RGB Jump
9	Full Color Fade #2
10	Pastel Color Fade in/Fade Out

Zone Setting

This controller is capable of controlling a single zone of DMX fixtures that have up to 5 channels.
The zone is designated by addressing your fixtures as follows:

Zone 1: Address to 001

Multiple fixtures can be set to the same 001 address in order to control all of the fixtures at the same time.

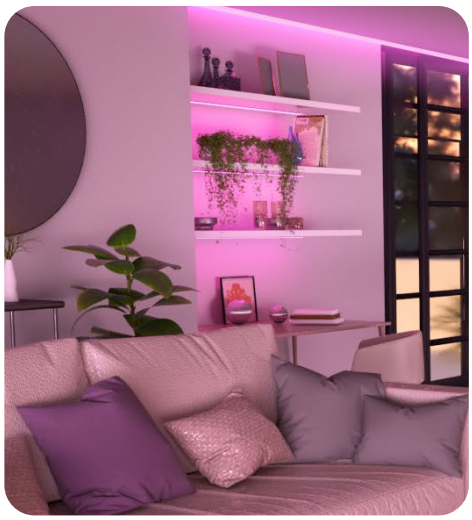

Troubleshooting

Lights not responding to the controller?

1. Make sure that the blue indicator light is on by pressing the power button. An amber indicator light signals that the controller is off, but the blue indicator light will blink when you press down on any key on the controller.

2. Make sure that the DMX fixture is addressed properly. Remember, the zone will only work when the DMX decoder is addressed to the 001 address mentioned in the "Zone Setting" section of this datasheet.

Lights not responding to the controller?

1. Make sure that all wiring connections are correct per the wiring instructions mentioned above. Reversing the Data + and Data - wires can cause lights to flicker and not respond to the controller.

2. Check the power connections of all components (controller, fixtures, drivers, etc).

3. Check DMX data connections.

4. Check DMX fixture connections.

Warranty Information

Limited Warranty
This product has a 5 year limited warranty from the date of shipment. This warranty only includes the main product outlined in this specification sheet and does not include the additional accessories that are used as a reference.

Consumer's Acknowledgment
These products are backed by a warranty when used properly and according to the provided specifications. When you purchase these products, you agree to the terms and conditions outlined in the warranty section below. Recommendations are provided to assist with installation, but the purchaser is responsible for proper installation, design, and maintenance.

This limited warranty does not cover product failures resulting from the following causes:
Not using a voltage regulated power supply to connect the LED product or controls; Connecting LED products to the wrong output voltage; Improper connection of power supplies, LED products, or controls; Connecting LED products or controls directly to any AC power source if they are stated for DC only input; Connecting power supplies backwards to an AC power source; Products used in an inappropriate location or in environmental conditions (temperature, humidity, moisture, etc.) outside the normal specified range; Water damage to products not specifically sold as waterproof products; Electrical power surges and spikes; Damage from hail, flooding, tornado, fire, wind, earthquake, lightning, electrical storm, or any other natural disasters or "force majeure" incidences; Damage caused by a vehicle or other accident; Damage caused when transporting the item; Damage to any products that were modified by the user, used for purposes other than as intended or directed, or connected to LED systems or components not purchased from the same vendor; Products that have been subjected to misuse, mishandling, misapplication or accident; Products used in connection with any components, devices, or systems other than those explicitly approved as compatible within this resource and associated documentation; Excessive wear and tear and/or physical or accidental abuse, loss, or theft. Improper repairs or warranty services performed by unauthorized parties will void this warranty.

FLEXFIRE

www.flexfireleds.com

Toll Free Number: 1-844-353-9347

Local Number: (925) 273-9080

info@flexfireleds.com